Overview
of
Data Structures

Definition

- Data structure is representation of the logical relationship existing between individual elements of data.
- In other words, a data structure is a way of organizing all data items that considers not only the elements stored but also their relationship to each other.
- Data structure affects the design of both structural and functional aspects of a program.

Program= Algorithm + Data Structure

Introduction

- Algorithm is a set of instructions written to carry out certain tasks & the data structure is the way of organizing the data with their logical relationship retained.
- To develop a program of an algorithm, we should select an appropriate data structure for that algorithm.
- Algorithm and its associated data structures form a program.

Classification of Data Structure

- Data structure are normally divided into two broad categories:
  - Primitive Data Structure
  - Non-Primitive Data Structure

Classification of Data Structure

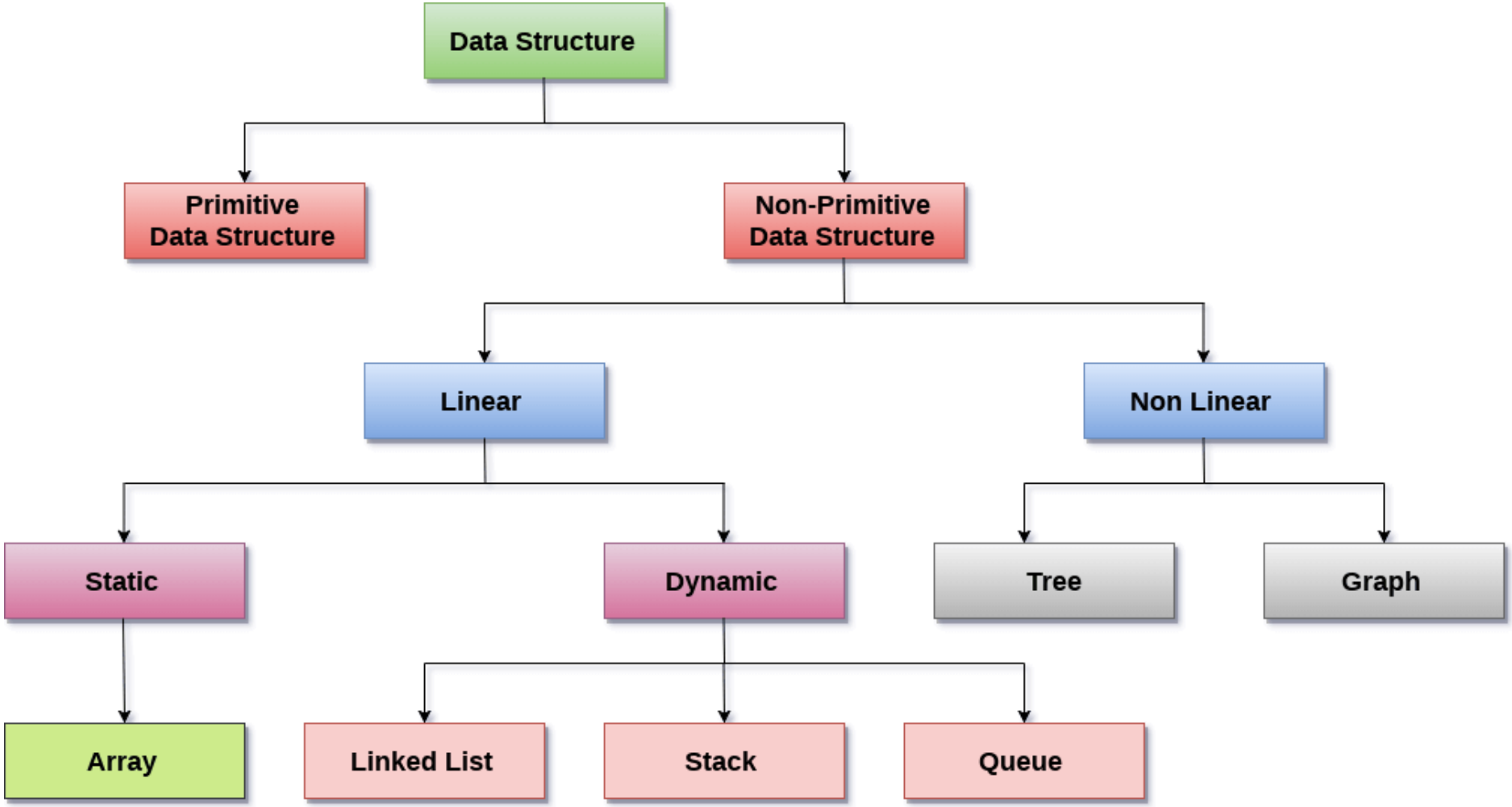

Primitive Data Structures

- There are basic structures and directly operated upon by the machine instructions.
- In general, there are different representation on different computers.
- Integer, floating-point number, character constants, string constants, pointers etc, fall in this category.

Non-Primitive Data Structures

- There are more sophisticated data structures.
- These are derived from the primitive data structures.
- The non-primitive data structures emphasize on structuring of a group of homogeneous (same type) or heterogeneous (different type) data items.
- Lists, Stack, Queue, Tree, Graph are example of non-primitive data structures.

Non-Primitive Data Structures

- The most commonly used operation on data structure are broadly categorized into following types:
  - Create
  - Selection
  - Updating
  - Searching
  - Sorting
  - Merging
  - Delete

Description of various Data Structures : Arrays

- An array is defined as a set of a finite number of **homogeneous** elements or the same data items.
- It means an array can contain one type of data only, either all integers, all float-point numbers or all characters.

Arrays

- Simply, declaration of array is as follows:

  int arr[10]

- Where int specifies the data type or type of elements arrays stores.
- “arr” is the name of the array & the number specified inside the square brackets is the number of elements an array can store, this is also called sized or length of array.

Arrays

- Following are some of the concepts to be remembered about arrays:
  - The individual element of an array can be accessed by specifying name of the array, following by index or subscript inside square brackets.
  - The first element of the array has index zero[0]. It means the first element and last element will be specified as: arr[0] & arr[9] respectively for an array of size 10.

Arrays

- The elements of array will always be stored in the consecutive (continues) memory location.
- The number of elements that can be stored in an array, that is the size of array or its length is given by the following equation:

(Upperbound - lowerbound)+1

Arrays

- For the above array it would be
  (9-0)+1=10,
  where 0 is the lower bound of array and 9 is the upper bound of array.
- Array can always be read or written through loop. If we read a one-dimensional array it require one loop for reading and other for writing the array.

Arrays

- For example: Reading into an array

```
For(i=0;i<=9;i++)
    scanf("%d",&arr[i]);
```

- For example: Writing/printing an array

```
For(i=0;i<=9;i++)
    printf("%d", arr[i]);
```

Arrays

- If we are reading or writing two-dimensional array it would require two loops. And similarly the array of a N dimension would required N loops.
- Some common operation performed on array are:
  - Creation of an array
  - Traversing an array
  - Insertion of new element
  - Deletion of required element
  - Modification of an element
  - Merging of arrays

Stack

- A stack is also an ordered collection of elements like arrays, but it has a special feature that deletion and insertion of elements can be done only from one end called the top of the stack (TOP)
- Due to this property it is also called as last in first out type of data structure (LIFO).

Stack

- It could be thought of just like a stack of plates placed on a table at a party, a guest always takes off a fresh plate from the top, and the new plates are placed onto the stack at the top.
- It is a non-primitive data structure.
- When an element is inserted into a stack or removed from the stack, its base remains fixed where the top of the stack changes.

Stack

- Insertion of an element into the stack is called PUSH, and deletion of the element from the stack is called POP.

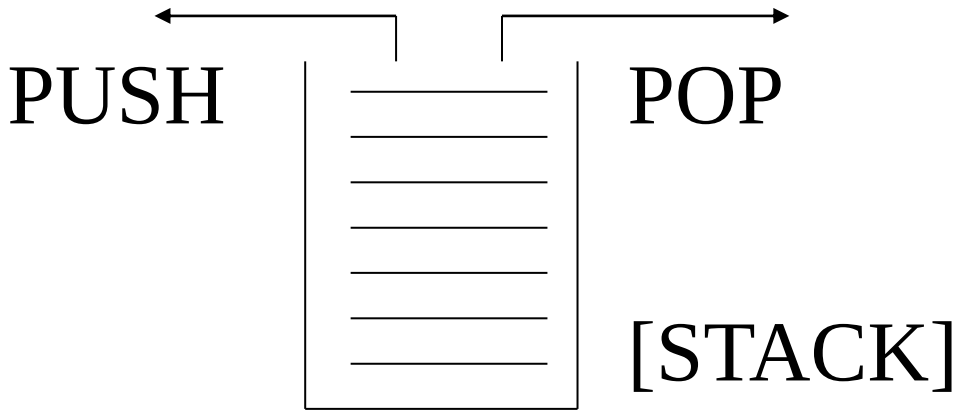

Stack

- The stack can be implemented into two ways:
  - Using arrays (Static implementation)
  - Using pointer (Dynamic implementation)

Queue

- Queue is a first in, first out (FIFO) type of data structure
- In a queue, new elements are added to the queue from one end called the REAR end, and the element is always removed from the other end, called the FRONT end.
- The people standing in a railway reservation row are an example of a queue.

Queue

- Each new person comes and stands at the end of the row, and the person getting their reservation confirmed gets out of the row from the front end.

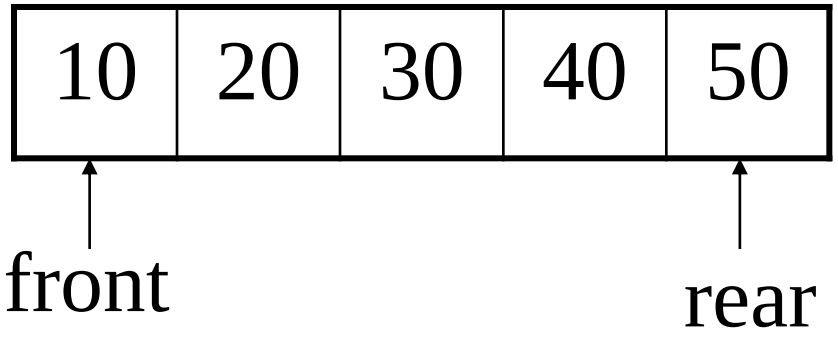

Queue

- The queue can be implemented into two ways:
  - Using arrays (Static implementation)
  - Using pointer (Dynamic implementation)

Queue

- Types of Queues:
  - Simple queue.
  - Circular queue.
  - Priority queue.
  - Double-ended queue (deque).

Linked Lists

- A lists (Linear linked list) can be defined as a collection of a variable number of data items.
- Lists are the most commonly used non-primitive data structures.
- An element of the list must contain at least two fields, one for storing data or information and the other for storing address of the next element.
- For storing address in the element we need a special data structure of list; the address must be pointer type.

Linked Lists

- Technically, each such element is referred to as a node, therefore a list can be defined as a collection of nodes as shown below:

<u>Linear Liked List</u>

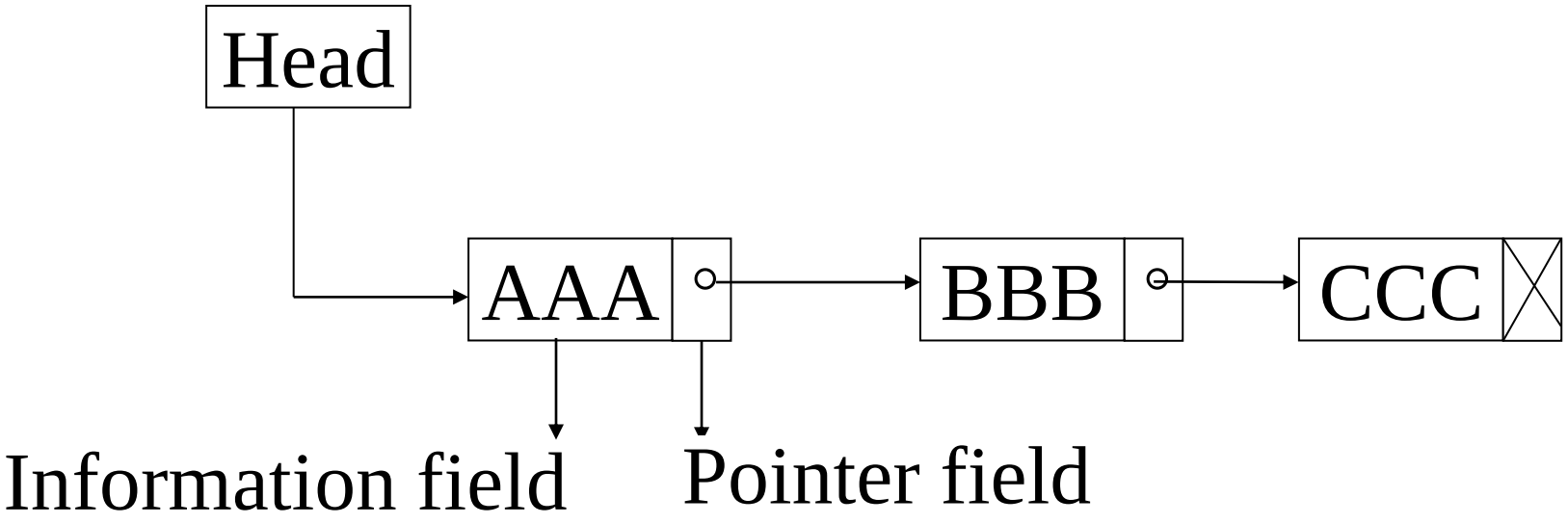

Node Structure

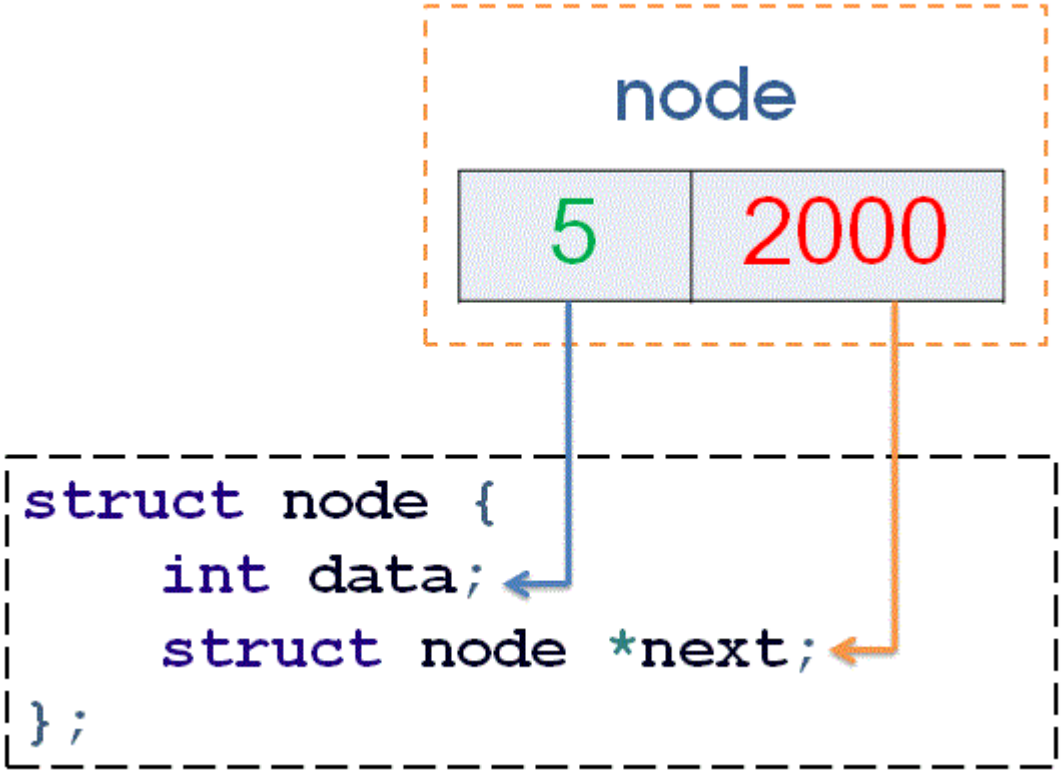

Linked Lists

- Types of linked lists:
  - Single linked list
  - Doubly linked list
  - Single circular linked list
  - Doubly circular linked list

Trees

- A tree can be defined as a finite set of data items (nodes).
- Tree is a non-linear data structure in which data items are arranged or stored in a sorted sequence.
- Tree represents the hierarchical relationship between various elements.

Trees

In trees:

- There is a special data item at the top of the hierarchy called the Root of the tree.
- The remaining data items are partitioned into a number of mutually exclusive subsets, each of which is a tree called the subtree.
- The tree always grows in length towards the bottom in data structures, unlike natural trees, which grow upwards.

Trees

- The tree structure organizes the data into branches, which relate the information.

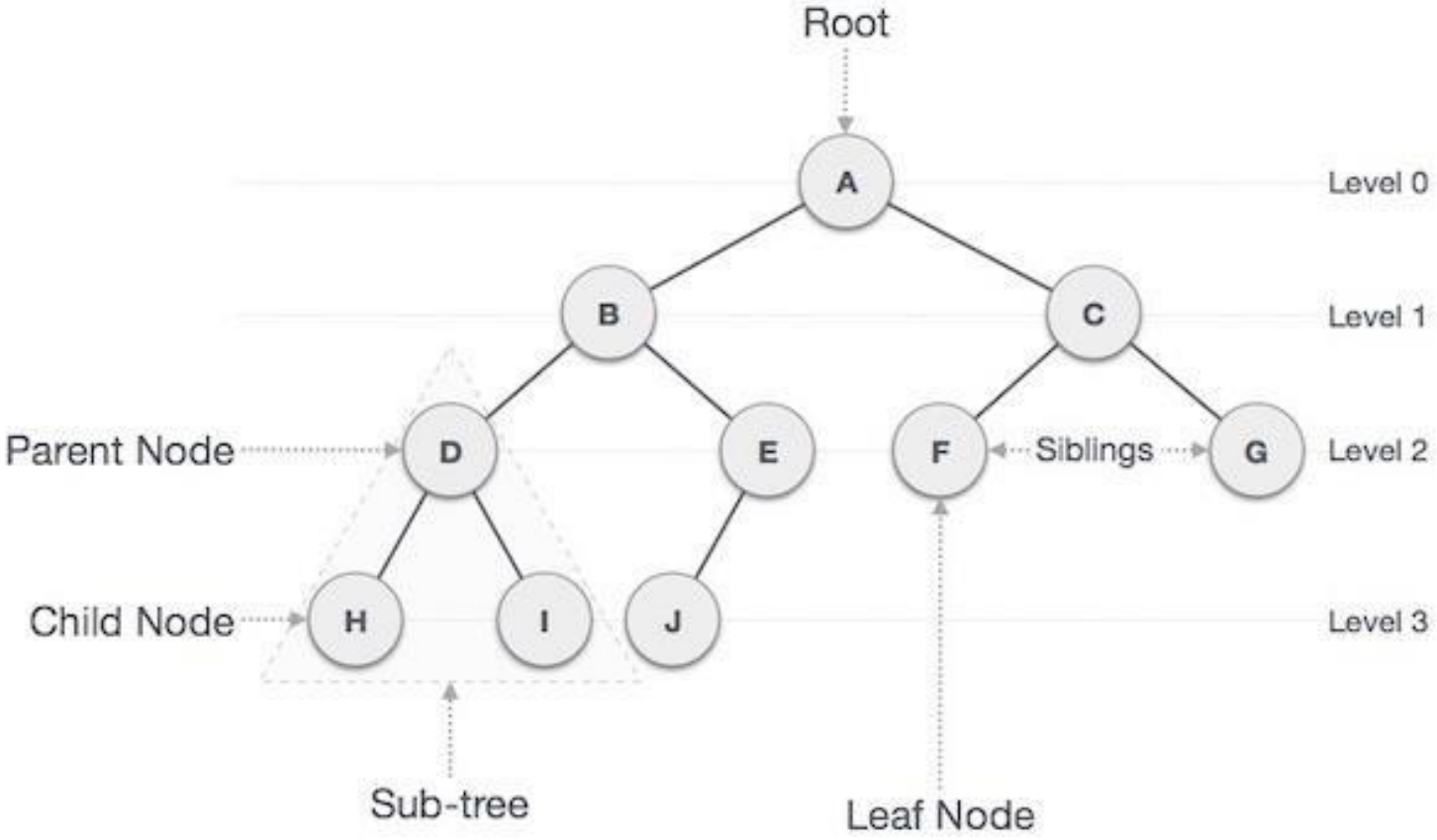

Graph

- Graph is a mathematical non-linear data structure capable of representing many physical structures.
- It has found application in Geography, Chemistry and Engineering sciences.
- Definition: A graph G(V, E) is a set of vertices V and set of edges E.

Graph

- An edge connects a pair of vertices and many have weight such as length, cost and other measuring instruments according to the graph.
- Vertices on the graph are shown as points or circles and edges are drawn as arcs or line segments.

Graph

- Example of graph:

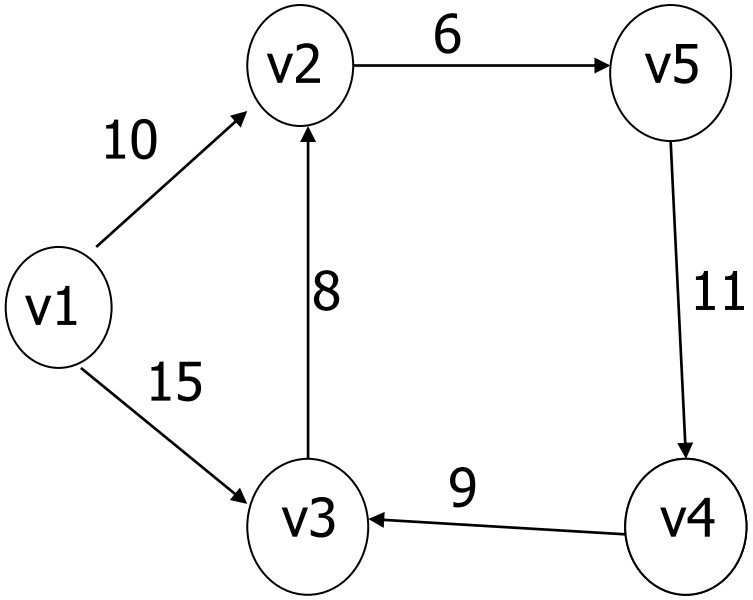

[a] Directed & Weighted Graph

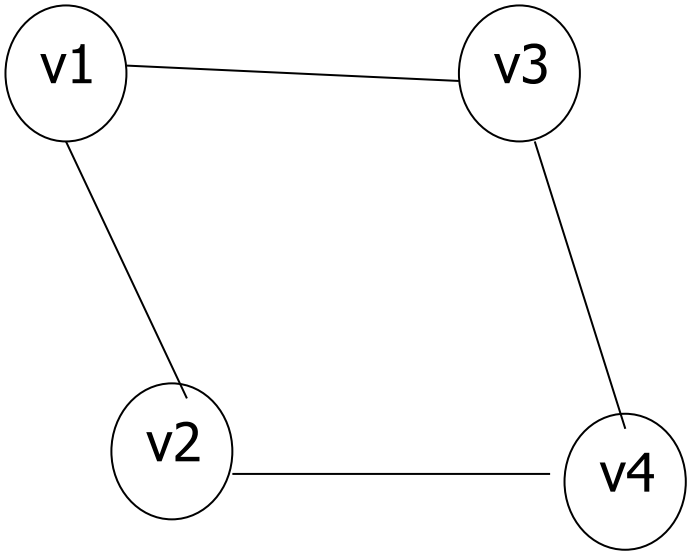

[b] Undirected Graph

Graph

- Types of Graphs:
  - Directed graph
  - Undirected graph
  - Weighted graph
  - Connected graph
  - Non-connected graph

Real-life applications of data structures:

- You have to store social network “feeds”. You do not know the size, and things may need to be dynamically added.
- You need to store undo/redo operations in a word processor.
- You need to evaluate an expression.
- You need to store the friendship information on a social networking site. i.e., who is friends with who.
- You need to store an image (1000 by 1000 pixels) as a bitmap.
- To implement printer spooler so that jobs can be printed in the order of arrival.